T E N D E R D O C U M E N T

SUB. : HIGH POWER RF 3-PORT CIRCULATOR

TENDER NO. : SMR/PUR/CN068/2024I/PT

DUE ON : 22-08-2023

Pre Bid Meeting Date: 31-07-2023 at 11.00 AM
SAMEER, Powai

EMD : ₹ 88,000/-

TENDER FEE : ₹ 500 + 18 % GST

SAMEER	प्रायोगिक सूक्ष्मतरंग इलेक्ट्रॉनिकी इंजीनियरी तथा अनुसंधान संस्था SOCIETY FOR APPLIED MICROWAVE ELECTRONICS ENGINEERING & RESEARCH आई आई टी कैंपस, पवई, मुंबई 400076. फोन : 022 25723030/7221 फैक्स : 022 25723254 IIT CAMPUS, POWAI, MUMBAI 400 076. TEL. : 022-25723030/7221, Fax : 022 25723254 WEB SITE : www.sameer.gov.in E-mail : purchase@sameer.gov.in

Contents

		Page No.
1. Section - I	Instructions for Submitting the Offers	3
2. Section - II	Technical Specifications	7
3. Section - III	Commercial and Other Terms & Conditions	9
4. Section - IV	Format for submitting Price Bid	12
5. Annexure I	Bid Security Declaration	14
6. Annexure II	Self Certification for Local Content	15

SECTION – I

INSTRUCTIONS FOR SUBMITTING THE OFFER

1. Tender document can be purchased from the Accounts Section of SAMEER located at IIT Campus, Powai, Mumbai-76, between 1.30 pm to 4.30 pm, on cash payment, on all days except Saturdays, Sundays and public holidays.

If the Tender document is downloaded from our website **http://www.sameer.gov.in or https://eprocure.gov.in/eprocure/app ,** then **the Tender Fee is not applicable.**

1.1 A Pre-bid meeting of all the Bidders will be convened on 31st, July 2023 at 11.00 AM. The purpose of this meeting will be to clarify the requirements as envisaged by the Authority and also to address the queries if any.
Location: SAMEER, IIT Bombay Campus, Hill Side, Powai, Mumbai-400 076.

2. Earnest Money Deposit (EMD) :

A. Earnest Money Deposit should be submitted in the form of Account Payee Demand Draft, Fixed Deposit Receipt, Banker's Cheque or Bank Guarantee from any commercial bank of India, drawn in favour of "**Society for Applied Microwave Electronics Engineering and Research**". If the EMD is given in the form of Bank Guarantee or Fixed Deposit then it should be valid for minimum 15 days beyond the validity of the quotation. EMD also can be paid through online payment mode. Intimation should be sent to SAMEER once the online payment is done. A copy of the Transaction details should be enclosed with Technical Bid.

For online payment our banker's details are as below:

Beneficiary Name : **Society for Applied Microwave Electronics Engineering and Research (SAMEER)**
Name and address of the Bank : Canara Bank, IIT Powai Branch Mumbai 400 076.
Account Number : 2724101086829, Type of the Account : Saving,
IFS Code : CNRB0002724 , MICR : 400015129

B. Refund of EMD : Unsuccessful tenderer's earnest money will be returned to them **without any interest** once the tender is finalized. Successful bidder's earnest money will be returned **without any interest** only after submission of Security Deposit (Performance Security).

C. Forfeiture of EMD : Earnest money of a tenderer will be forfeited, if the tenderer withdraws or amends its tender or impairs or derogates from the tender in any respect within the period of validity of its tender. Successful tenderer's earnest money will be forfeited if tenderer does not execute purchase order / contract as per the terms and conditions mentioned therein.

D. Exemption from submission of EMD : Firms which are registered with Ministry of Electronics and Information Technology (MeitY) or All MSEs having registration as per provisions of the MSME Policy i.e. registration with District Industries Centre (DIC) or Khadi and Village Industries Commission (KVIC) or Khadi and Industries Board (KVIB) or Coir Board or National Small Industries Commission (NSIC) or directorate of Handicrafts and Handlooms or Udyog Aadhaar Memorandum or any other body specified by Ministry of MSME are also exempt from payment of EMD. Proof of valid registration should be attached along with the Technical Bid, failing which the Tender will be rejected.

E. Bid Security Declaration for EMD: In lieu of submission of EMD, vendor may submit the "Bid Security Declaration" as per Annexure I, on their letterhead. It may be noted that the Ministry of Finance had introduced the submission of Bid Security Declaration in lieu of the EMD, for a limited period only. If at any time the Ministry of Finance withdraws the facility of the submission of Bid Security Declaration or the relevant order of the said Ministry providing for the submission of Bid Security Declaration in lieu of the EMD ceases to be in force, the bidder will have to submit the EMD.

3. **A**. In a tender, either the Indian Agent on behalf of the Principal / OEM (Original Equipment Manufacturer) or Principal/OEM itself can bid but both cannot bid simultaneously for the same item/product in the same tender.

B. If an agent submits bid on behalf of the Principal/OEM, the same agent shall not submit a bid on behalf of another Principal/OEM in the same tender for the same item/product.

Failure to adhere to the above conditions will lead to automatic disqualification of the bid. Tenders submitted by the Indian agent on behalf of his principal /OEM should be supported with a letter of authority from the Principal/ OEM.

In case the manufacturer does not have an authorised representative in India at the time of submission of the bids and the company appoints a representative later on, SAMEER will only correspond with the manufacturer.

4. Any bidder from a country which shares a land border with India will be eligible to bid in any procurement whether of goods, services or works only if they are registered with the Registration Committee, constituted by the Department of Promotion of Industry and Internal Trade (DPIIT). A valid registration certificate is to be attached. "Bidder from a country which shares a land border with India" means: -

a. An entity incorporated, established or registered in such a country; or
b. A subsidiary of an entity incorporated, established or registered in such a country; or
c. An entity substantially controlled through entities incorporated, established or registered in such a country; or
d. An entity whose beneficial owner is situated in such a country; or
e. An Indian (or other) agent of such an entity; or
f. A natural person who is a citizen of such a country; or
g. A consortium or joint venture where any member of the consortium or joint venture falls under any of the above.

The Successful bidder shall not be allowed to sub-contract works to any contractor from a country which shares a land border with India, unless such contractor is registered with the Registration Committee, constituted by the DPIIT.

5. PERFORMANCE SECURITY

a. The successful bidder has to give Performance Security Deposit in the form of an Account Payee Demand Draft / Fixed Deposit Receipt from an Indian commercial bank / Bank Guarantee from an Indian commercial bank / a counter Letter of Credit (LC) from our bankers (in case of foreign order), for **3 %** of Order Value, immediately after receiving the purchase order. Performance Security should remain valid for a period of sixty days beyond the date of all contractual obligations including warranty obligations.

b. Successful tenderers Performance Security will be forfeited if the purchase order / contract is not executed as per the terms and conditions mentioned therein.

c. Performance Security Deposit without any interest will be returned only after complete execution of purchase order (including warranty period), as per purchase order 's terms and conditions.

6. Purchase Preference (Preference to make in India) : As prescribed in "Public Procurement (Preference to Make in India) order 2017 of GOI, Department of Industrial Policy and Promotion" (OM No. P-45021/2/2017-PP(BE-II dated 15th June 2017 as amended from time to time), purchase preference will be given to the bidder. Necessary certification for local content must be submitted by the prospective bidders strictly as per Annexure II", on their letterhead.

7. Tender is to be submitted in **two separate sealed covers, superscribed as `Technical Bid' and `Price Bid'** respectively and both these sealed covers are to be put in a bigger cover which should also be sealed and duly superscribed. Tender should be addressed to '**The Purchase Officer, SAMEER, IIT Campus, Powai, Mumbai 400 076**'. Tender reference number including 'Due Date' should be clearly mentioned on all covers. Name ,Address and contact details of the vendor should be mentioned at back side of all covers.

8. Further details concerning 'Technical Bid' and 'Price Bid' are given below:

A. Technical Bid:

- Original manufacturer's technical specification sheet must support details provided in the Technical bid with all the specifications/ relevant technical Literatures/Brochures/Catalogues for the item. Bids received without the printed technical specification sheet/brochures/catalogues for item will be technically disqualified.
- The Technical Bid should not contain any **price information.**
- The item and accessories quoted must be from original manufacturer and must be new (**No second hand item/sub-item will be accepted**)
- In case the bidder is the authorised representative of a foreign manufacturer/supplier, a certificate from the principal must be included along with the technical bid.
- In case of deviation or substitution from the particular specification contained in the tender document, please indicate clearly as 'Alternative offer' and should contain sufficient details to show that the alternative would equally serve the purpose. All relevant technical data should be enclosed. In case of equipment, the itemised cost of essential accessories, optional accessories and spares required need to be specified.

- **Technical Bid should contain the following :**

  a. **Earnest Money Deposit (EMD) / valid certificate for exemption or Bid Security Declaration** (Annexure I).
  b. **Tender Fee Receipt Number** (if the tender document is purchased from Accounts Section, SAMEER, Mumbai).
  c. **Technical Specification**
  d. **SECTION III** of Tender Document i.e. Commercial Terms & Conditions duly filled, stamped and signed.
  e. A copy of '**Price Bid**' with all financial figures **suppressed/deleted.**
  f. Certification for local content (Annexure II).
  g. A valid registration certificate from DPIIT as per Sr. No. 4 of Section I, if applicable.

  Technical Bid without the above information will not be considered.

B. Price Bid :

Price bid shall contain the following information:

a. Quotation for the items (including the price break up for all options and accessories).
b. TAXES , DUTIES AND LEVIES if applicable should be clearly specified.
c. Discount offered on quoted price (considering that SAMEER is an R&D organisation).
d. Total price should be mentioned in both figures and words. Alterations, if any, should be attested / initialled.
e. The bid shall be free of hidden costs / ambiguity.
f. There shall be no overwriting.

9. Tenders/Bids should be dropped in **Tender Box** only.

10**.** Tender received via email, fax and **Late Tenders** will not be considered.

11. Unsuccessful bidders will **not be formally informed** of the result of their tender.

12. Only **Technical Bid** will be opened on the next day of the due date. The Price Bids of the technically short listed tenderers will be opened at a later date with intimation to the short listed tenderers.

13. Date and Timing for opening Tender : Next working day after due date.

IMPORTANT NOTE:

a. Participation in Public Tender Opening will be STRICTLY via ONLINE VIRTUAL PLATFORM.
b. Vendors interested must fill the ONLINE FORM available at http://publictender.sameer.gov.in/ , two working days before the tender opening date.
c. On the day of tender opening, a virtual meeting link will be provided through mail to the vendors who have registered for participating in the tender. Only the vendors who have submitted the offer can participate in the online tender opening.
d. It will be assumed that those Vendors who did not fill in the form are not interested in joining the Tender Opening Process.

14. For any clarification please mail to purchase@sameer.gov.in

15. Corrigenda: Corrigenda, if any, to this tender will be published on our website www.sameer.gov.in. The bidders are advised to check our website, before submitting the bid.

SECTION - II

TECHNICAL SPECIFICATION

1. HIGH POWER RF 3-PORT CIRCULATOR (S-BAND) Qty- 05 Nos

- Configuration: 3 –Port T junction
- Orientation of Rotation: Clockwise
- Centre Frequency f_0 : 2998 MHz
- Bandwidth BW : ± 10 MHz
- Forward Peak Power : 3.5 MW minimum
- Forward Average Power : 4.5 KW minimum
- Reverse Power : 100% at any phase
- Insersion Loss : ≤ 0.15 dB
- Return Loss : ≥ 30 dB @ f_0 ; ≥ 26 dB @ in BW
- Isolation : ≥ 30 dB @ f_0 ; ≥ 26 dB @ in BW
- RF Waveguide type : WR284
- RF Flange / Connectors : CPR284 F, FLAT
- Cooling System : Demineralized Water Cooled
- Water Flow Rate : ≥ 200 L/h
- Gas Pressure: SF_6 @ 3 – 4 Bar
- Magnetic Stray Field : < 5 G in 1m distance
- Water Inlet Temp : Selectable between 20°C and 40°C
- Arc Viewport is optional

2. Metallic RF Shims with Gaskets Qty - 45 Nos
   WR284 RoHS
   Compatible with above circulator

3. Automatic frequency control unit for magnetron Qty-1 Nos.

Center frequency f_0	2998 MHz
Bandwidth Δf	±10 MHz
Forward Peak Power (FWD and REF)	± 38dBm max
Forward Average Power (FWD and REF)	± 20 dBm max
Pulse Width 4 to 5 µs	typical
Suppression of Second Harmonic	> 30 Db
AFC A and AFC B	+3.75 V ± 0.75V
Matching of AFC A and AFC B within	10% max
Phase Shifting Range	400 deg min
Phase Adjustment manual tuning	knob, incl, locking screw
Number of Turns	78± 10%

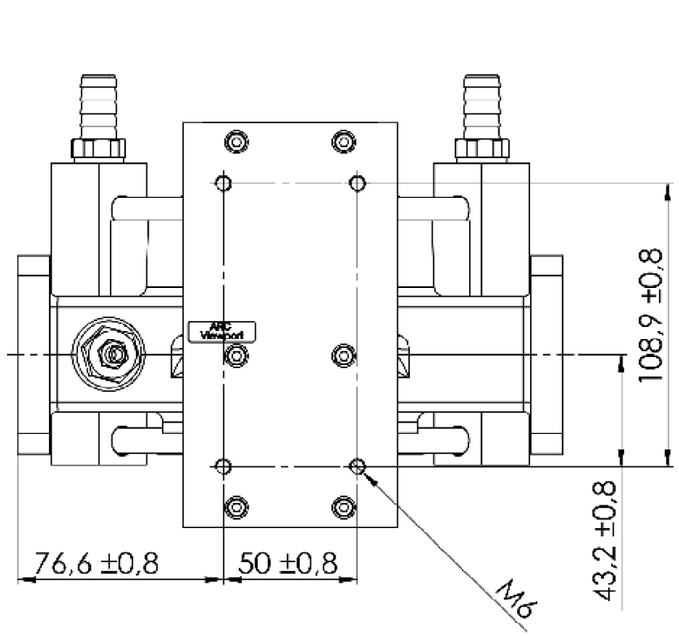

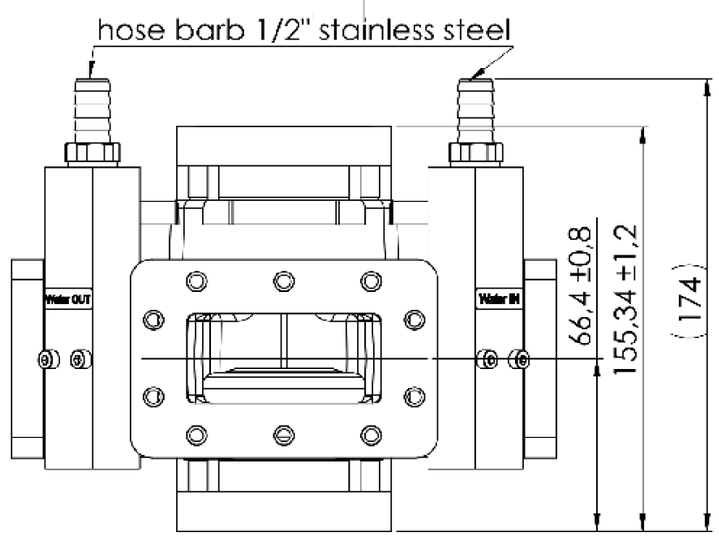

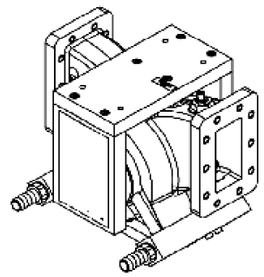

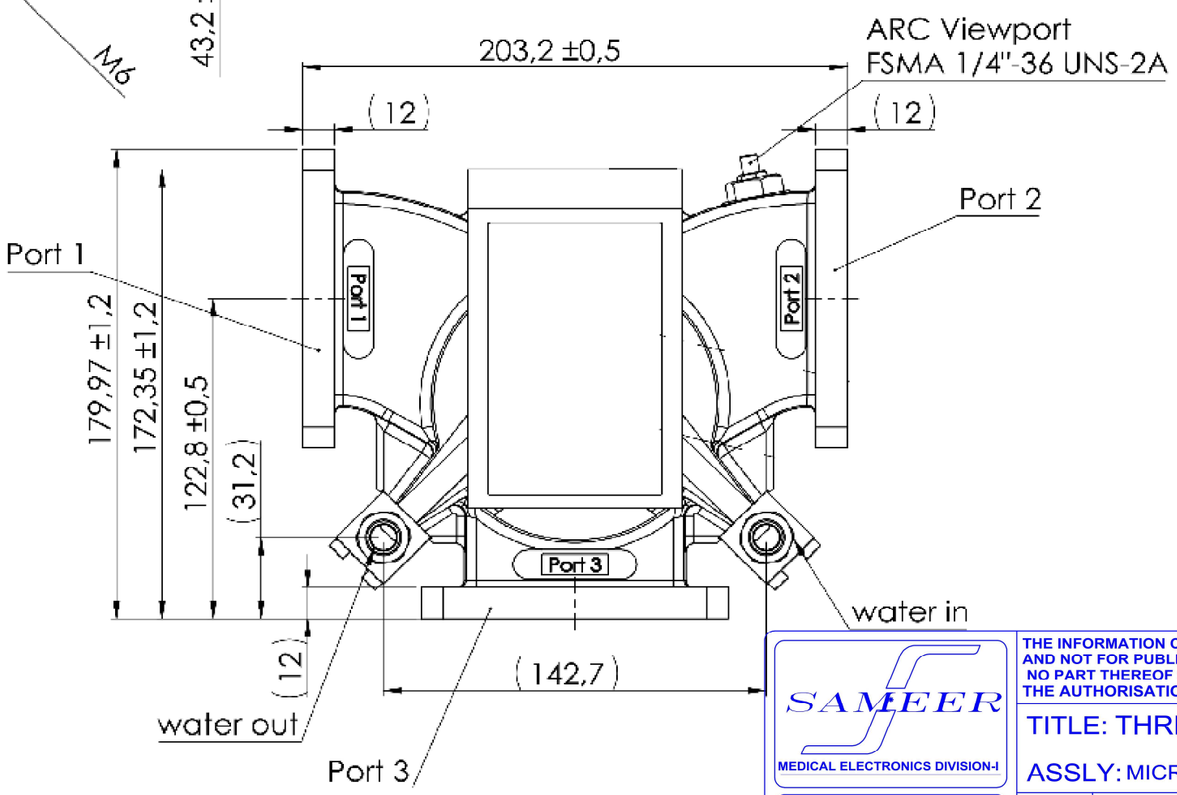

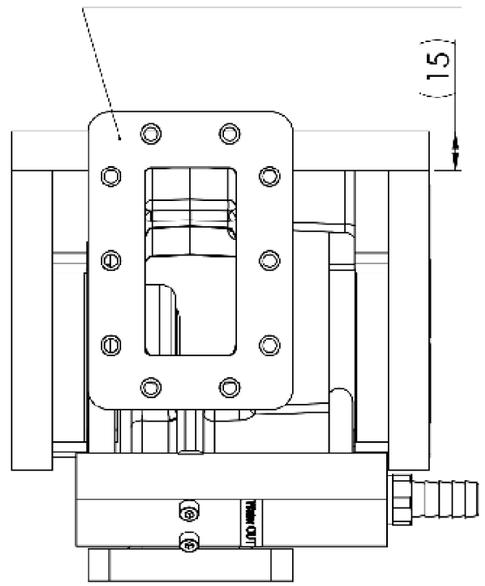

SAMEER
MEDICAL ELECTRONICS DIVISION-I

SOCIETY FOR APPLIED MICROWAVE ELECTRONICS ENGG & RESEARCH
IIT CAMPUS POWAI
MUMBAI- 400 076 INDIA

THE INFORMATION CONTAINED HEREIN IS CONFIDENTIAL PROPERTY OF SAMEER-MUMBAI AND NOT FOR PUBLICATION. THE INFORMATION IS ISSUED ON THE UNDERSTANDING THAT NO PART THEREOF SHALL BE COPIED OR COMMUNICATED TO A THIRD PARTY WITHOUT THE AUTHORISATION IN WRITING FROM SAMEER MUMBAI.

TITLE: THREE PORT CIRCULATOR

ASSLY: MICROWAVE

REV

MATL.	--	GEN.TOL.	IS: 2102(M)	DRN.	NSS	DATE
QTY.	--	SCALE	NTS	WT.		16-06-23
ALL DIM. ARE IN mm		DRG.NO.	SMR/LTD/TPC/01			
FINISH				CHKD.		
FILE:						

SECTION- III

Commercial & Other Terms and Conditions

Vendor to state Complied / Not Complied – Deviations if any in the REMARKS column

S.N.	DESCRIPTION	ESSENTIAL CONDITIONS	REMARKS
a.	PRICES	**a. For Import Order :Prices** quoted should be on **FCA** (**nearest Intl. Airport at shipper's country**) , Name of the Airport should be mentioned clearly. **b. For Local Order : Prices** should include delivery charges up to **SAMEER's Stores**. Any additional charges, taxes and levies should be clearly mentioned. In the event of a Purchase Order, it will be the responsibility of the supplier to pay whatever charges are payable to different agencies in their country. The purchaser will not pay any charges other than the agreed price as per the contract.	
b.	TAXES , DUTIES AND LEVIES APPLICABLE	(Existing applicable rates should be mentioned)	
		1.	
		2.	
		3.	
		4.	
c.	PACKING	All the items should be packed in suitable boxes, crated and protected from damages during the transit till they are delivered to destination.	
d.	FREIGHT AND INSURANCE	a. For Local Order : To be arranged by supplier. All the items shall be delivered to Stores Officer, SAMEER, IIT Campus, Powai, Mumbai after obtaining a shipping release in the appropriate pro-forma from the purchaser. The Vendor shall be fully responsible for the safe delivery of all the items from and to SAMEER Powai and shall satisfy the purchaser that adequate measures have been taken for the same. b. For Import Order : Will be arranged by SAMEER from FCA International Airport.	
	Vendor's Signature:	Seal:	

S.N.	DESCRIPTION	ESSENTIAL CONDITIONS	REMARKS
e.	ANY OTHER CHARGES APPLICABLE	SUPPLIER TO SPECIFY	
f.	MODE OF DELIVERY	a. For Local Order : By road b. For Import Order : By Air	
g.	DELIVERY SCHEDULE	16-18 weeks	
h.	WARRANTY	Standard 1 year	
i.	PAYMENT TERMS	a. For Import order : 90 % against Irrevocable Letter of Credit or Sight Draft and balance 10 % through wire transfer after acceptance of material at SAMEER. b. For Local order : 75 % after delivery followed by inspection balance 25 % against Test, Installation & acceptance (whichever is applicable) of material / consignment, at SAMEER.	
j.	VALIDITY OF QUOTATION	90 DAYS MIN FROM THE DUE DATE.	
k.	Tender Fee (Including GST)	Tender document may be purchased from the Accounts Section of SAMEER, Mumbai on cash payment or by Demand Draft from any commercial bank of India, drawn in favour of "**Society for Applied Microwave Electronics Engineering and Research**". If the Tender document is downloaded from website **,** then **the Tender Fee is not applicable.**	
l.	Earnest Money Deposit (EMD)	**a. Earnest Money Deposit** (EMD) should be submitted in the form of Account Payee Demand Draft, Fixed Deposit Receipt, Banker's Cheque or Bank Guarantee from any commercial bank of India, drawn in favour of "**Society for Applied Microwave Electronics Engineering and Research**". **b.** For exemption, please refer SECTION I, 2 d **c.** In lieu of EMD, vendor may submit "Bid security Declaration" on their letterhead. (**vendor should mention the applicable option from above in the Remark column**)	

Vendor's Signature: Seal:

S.N.	DESCRIPTION	ESSENTIAL CONDITIONS	REMARKS
m.	PERFORMANCE SECUIRTY	The successful bidder has to give Security Deposit in the form of an Account Payee Demand Draft / Fixed Deposit Receipt from an Indian commercial bank / Bank Guarantee from an Indian commercial bank / a counter Letter of Credit (LC) from our bankers (in case of foreign order), for **3 %** of Order Value, immediately after receiving the purchase order. Performance Security should remain valid for a period of sixty days beyond the date of all contractual obligations including warranty obligations.	
n.	EXEMPTION FOR CUSTOM DUTY AND EXCISE DUTY	SAMEER is registered with Department of Scientific and Industrial Research (DSIR) for the purpose of availing **custom duty exemption** in terms of Government of India Notification No. 51/96-customs amended to 24/2007-customs dated 1st March 2007. {approx. 5.50 % duty (5 % Basic + 10% Social welfare surcharge) + IGST is applicable under his notification} and **central excise duty exemption** in terms of Government Notification no. 10/97-central excise amended to 16/2007-central excise dated 1st March 2007.	
o.	SHARING LAND BORDER WITH INDIA	a. Yes / No b. If Yes, whether necessary valid registration certificate is attached along with Technical bid.	
p.	COUNTRY OF ORIGIN	Please mention the country of origin of the good(s) proposed to be supplied	
q.	JURISDICTION	MUMBAI	

Vendor's Signature: Seal:

SECTION- IV

Format for Price Bid (in INR)

IMPORTANT
Vendor is required to submit the price bid in the given format on their LETTER HEAD.
One copy of the price bid without the financial figure should be enclosed along with the Technical Bid.

ITEM	DESCRIPTION	QUANTITY	RATE IN INR	PRICE IN INR
I				
II				
III				
IV				
V	**OTHER CHARGES , , if any**			
1.	**TAXES AND DUTIES APPLICABLE ON ITEMS**			
	I			
	II			
	III			
	IV			
2.	**FREIGHT** from Vendor's manufacturing facility to SAMEER Powai.			
3.	**INSURANCE**			
4.	**ADDITIONAL CHARGES IF ANY**			
	TOTAL AMOUNT			
	TOTAL AMOUNT (IN WORDS)			
	Vendor's Signature: Seal:			

Format for Price Bid (in Foreign currency)

IMPORTANT
Vendor is required to submit the price bid in the given format on their LETTER HEAD.
One copy of the price bid without the financial figure should be enclosed along with the Technical Bid.

ITEM	DESCRIPTION	QUANTITY	RATE IN (Name of currency)	PRICE IN (Name of currency)
I				
II				
III				
IV				
	ADDITIONAL CHARGES IF ANY			
	FCA CHARGES (Name of the Intl. airport) From Vendor's manufacturing/shipping facility to Manufacturer's country's Intl. Airport.			
	TOTAL AMOUNT			
	TOTAL AMOUNT (IN WORDS)			
	Vendor's Signature: Seal:			

S/d
Purchase Officer

Annexure - I

Bid Security Declaration

Dated :

To,
The Registrar,
Society for Applied Microwave Electronics Engineering and Research
IIT Campus, Powai,
Mumbai 400076

Sir,

I, the undersigned, declare that:

1. I am duly authorised to submit bid and undertakings in response to your tender No._____

2. I understand that the bidders are required to submit Bid Security of the prescribed amount, while submitting bids in response to tender enquiries of the Society for Applied Microwave Electronics Engineering and Research (SAMEER).

3. As an alternative to the Bid Security, I hereby declare that my firm, which is submitting the current bid, will be suspended for the period of time specified in the request for bid document or for a period of three years if no such period of time is specified in the request for bid document, from being eligible to submit bids for contracts with SAMEER,

i. if we withdraw or modify the bid during the period of validity (including the extended period of validity) **or**
ii. If we fail to sign the contract, or to submit the performance security before the deadline prescribed in the request for bid document or in the communication sent by SAMEER.

Signature with seal:

Name: _____

Designation _____

Name of the firm _____

Place _____

Annexure - II

Self Certification for Local Content

(Should be on the letter head of the bidder)

*We [name of manufacturer] hereby confirm in respect of quoted item(s) that Local Content is equal to or more than 50% and we come under 'Class-I Local Supplier' Category. Being 'Class-I Local Supplier', we are eligible for Purchase Preference in accordance with Department of Promotion of Industry and Internal Trade's Order No.P45021/2/2017-PP (B.E.-II) dated 15.06.2017 , as modified, vide the said Department's orders No. P-45021/2/2017-PP(BE-II) dated 28/05/2018, No. P-45021/2/2017-PP(BE-II) dated 29/05/2019 and No. P-45021/2/2017-PP(BE-II) dated 04/06/2020

OR

*We [name of manufacturer] hereby confirm in respect of quoted items(s) that Local Content is more than 20% but less than 50% and we come under 'Class-II Local Supplier' Category, as per the said order of Department of Promotion of Indusry and Internal Trade

OR

*We [name of manufacturer] hereby confirm in respect of quoted items(s) that Local Content is less than or equal to 20% and we come under 'Non Local Supplier' Category.

The details of the location (s) at which the local value addition made is /are as under:

1……

2……

3……

*Strike out whichever is not applicable

Date: Seal & Signature of the Bidder

NOTE :-

1 Bidder should submit Self-certification that the item offered meets the minimum local content (as above) giving details of the location(s) at which the local value addition is made in case the bidder wishes to avail the benefits under the make in India policy, if applicable.

2. In cases of procurement for a value in excess of Rs. 10 crores, the local supplier shall be required to provide a certificate from the statutory auditor or cost auditor of the company (in the case of companies) or from a practicing cost accountant or practicing chartered accountant (in respect of suppliers other than companies) giving the percentage of local content to avail the benefits under the make in India policy, if applicable.

3. The orders quoted above are available on our website (https://www.sameer.gov.in/tenders.asp#page).